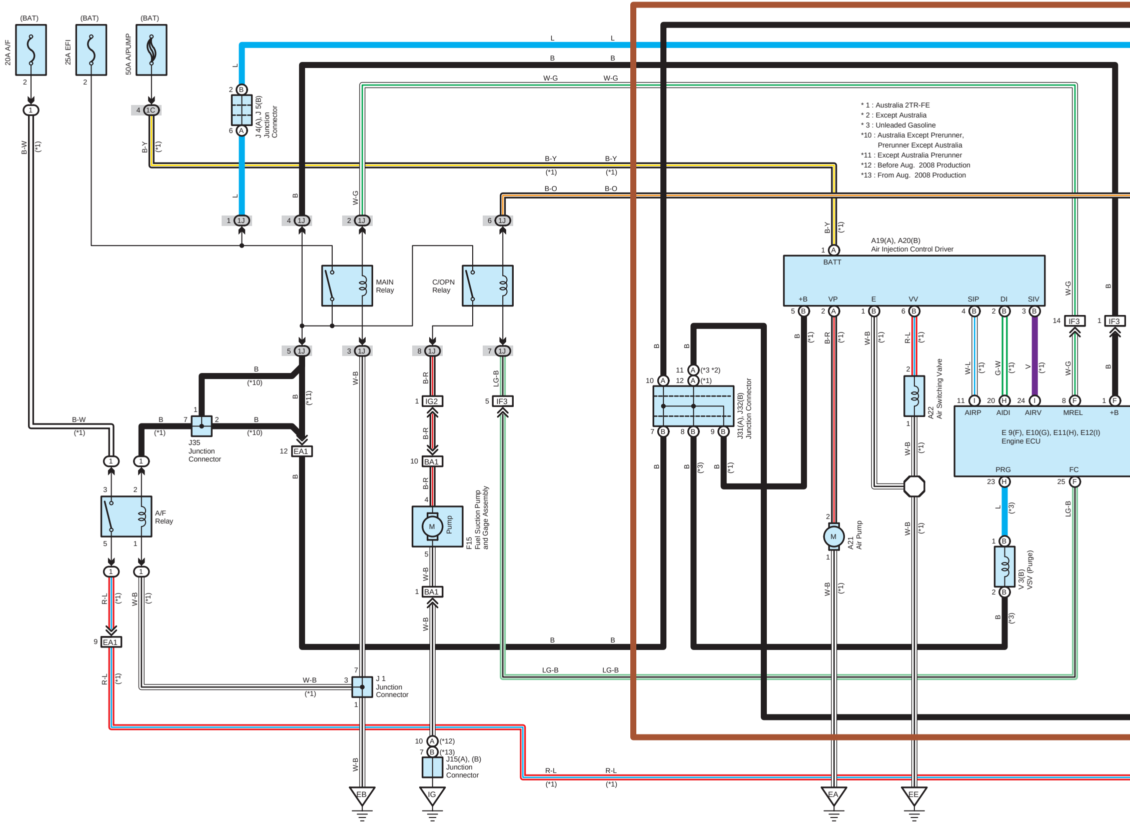
(BAT)
20A A/F
(BAT)
25A EFI
(BAT)
50A A/PUMP
J 4(A), J 5(B) Junction Connector
MAIN Relay
C/OPN Relay
A/F Relay
J35 Junction Connector
J 1 Junction Connector
F15 Fuel Suction Pump and Gage Assembly
Pump
M
J15(A), (B) Junction Connector
J31(A), J32(B) Junction Connector
A19(A), A20(B) Air Injection Control Driver
BATT
+B
VP
E
VV
SIP
DI
SIV
A22 Air Switching Valve
A21 Air Pump
E 9(F), E10(G), E11(H), E12(I) Engine ECU
AIRP
AIDI
AIRV
MREL
+B
PRG
FC
V 3(B) VSV (Purge)
1J
1C
EA1
IG2
BA1
IF3
EB
IG
EA
EE
L
B
W-G
B-Y
B-O
B-W
B-R
LG-B
W-B
R-L
W-L
G-W
V
(*1)
(*3)
(*10)
(*11)
(*12)
(*13)
(*3 *2)

* 1 : Australia 2TR-FE
* 2 : Except Australia
* 3 : Unleaded Gasoline
*10 : Australia Except Prerunner,
Prerunner Except Australia
*11 : Except Australia Prerunner
*12 : Before Aug. 2008 Production
*13 : From Aug. 2008 Production

* 1 : Australia 2TR-FE
* 2 : Except Australia
* 3 : Unleaded Gasoline
* 6 : Leaded Gasoline
*12 : Before Aug. 2008 Production
*13 : From Aug. 2008 Production

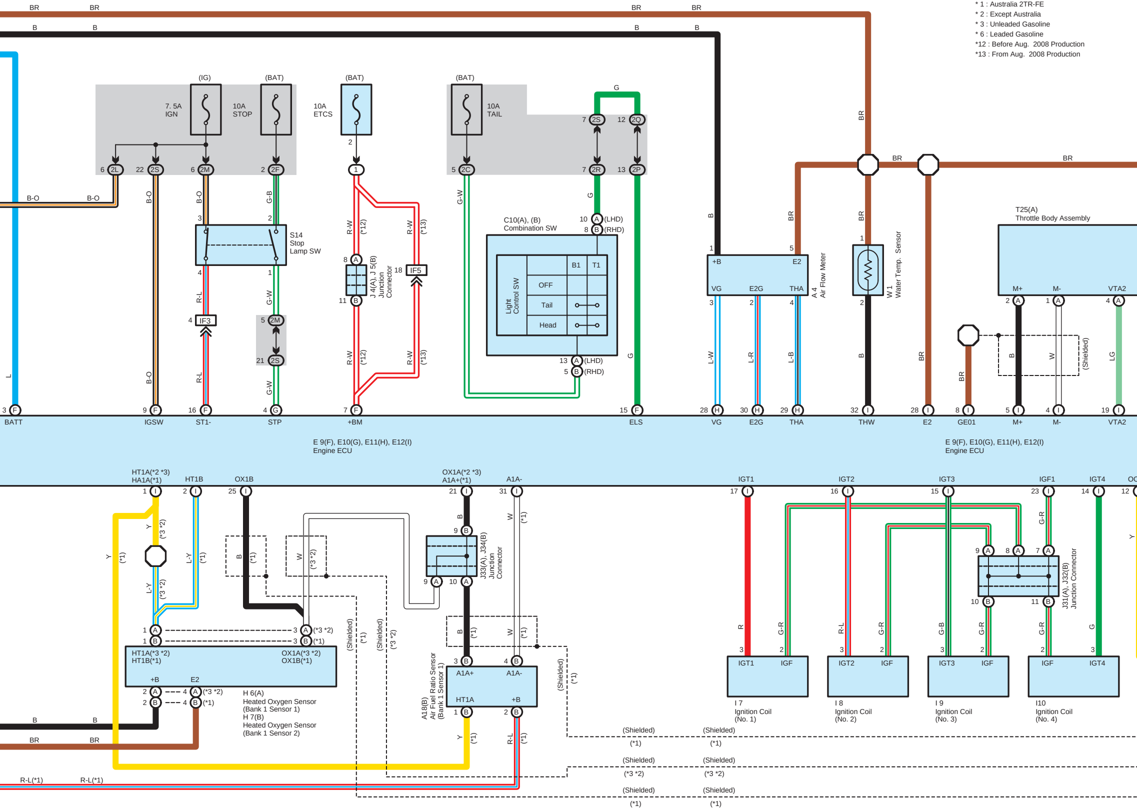
BR
B
(IG)
(BAT)
7. 5A IGN
10A STOP
10A ETCS
10A TAIL
G
7 2S
12 2Q
7 2R
13 2P
6 2L
22 2S
6 2M
2 2F
1
5 2C
B-O
G-B
R-W (*12)
R-W (*13)
G-W
S14 Stop Lamp SW
J 4(A), J 5(B) Junction Connector
8 A
11 B
18 IF5
4 IF3
5 2M
21 2S
R-L
C10(A), (B) Combination SW
10 A (LHD)
8 B (RHD)
Light Control SW
B1
T1
OFF
Tail
Head
13 A (LHD)
5 B (RHD)
A 4 Air Flow Meter
+B
E2
VG
E2G
THA
L-W
L-R
L-B
W 1 Water Temp. Sensor
T25(A) Throttle Body Assembly
M+
M-
VTA2
W
LG
(Shielded)
L
3 F BATT
9 F IGSW
16 F ST1-
4 G STP
7 F +BM
15 F ELS
28 H VG
30 H E2G
29 H THA
32 I THW
28 I E2
8 I GE01
5 I M+
4 I M-
19 I VTA2
E 9(F), E10(G), E11(H), E12(I) Engine ECU
HT1A(*2 *3) HA1A(*1)
HT1B
OX1B
OX1A(*2 *3) A1A+(*1)
A1A-
IGT1
IGT2
IGT3
IGF1
IGT4
OC
1 I
2 I
25 I
21 I
31 I
17 I
16 I
15 I
23 I
14 I
12
Y (*1)
Y (*3 *2)
L-Y (*1)
L-Y (*3 *2)
B (*1)
W (*3 *2)
J33(A), J34(B) Junction Connector
9 B
9 A
10 A
HT1A(*3 *2) HT1B(*1)
OX1A(*3 *2) OX1B(*1)
+B
E2
(*3 *2)
(*1)
H 6(A) Heated Oxygen Sensor (Bank 1 Sensor 1)
H 7(B) Heated Oxygen Sensor (Bank 1 Sensor 2)
A18(B) Air Fuel Ratio Sensor (Bank 1 Sensor 1)
A1A+
A1A-
HT1A
R-L (*1)
R-L(*1)
R
G-R
G-B
J31(A), J32(B) Junction Connector
I 7 Ignition Coil (No. 1)
I 8 Ignition Coil (No. 2)
I 9 Ignition Coil (No. 3)
I10 Ignition Coil (No. 4)
IGF
(Shielded) (*1)
(Shielded) (*3 *2)

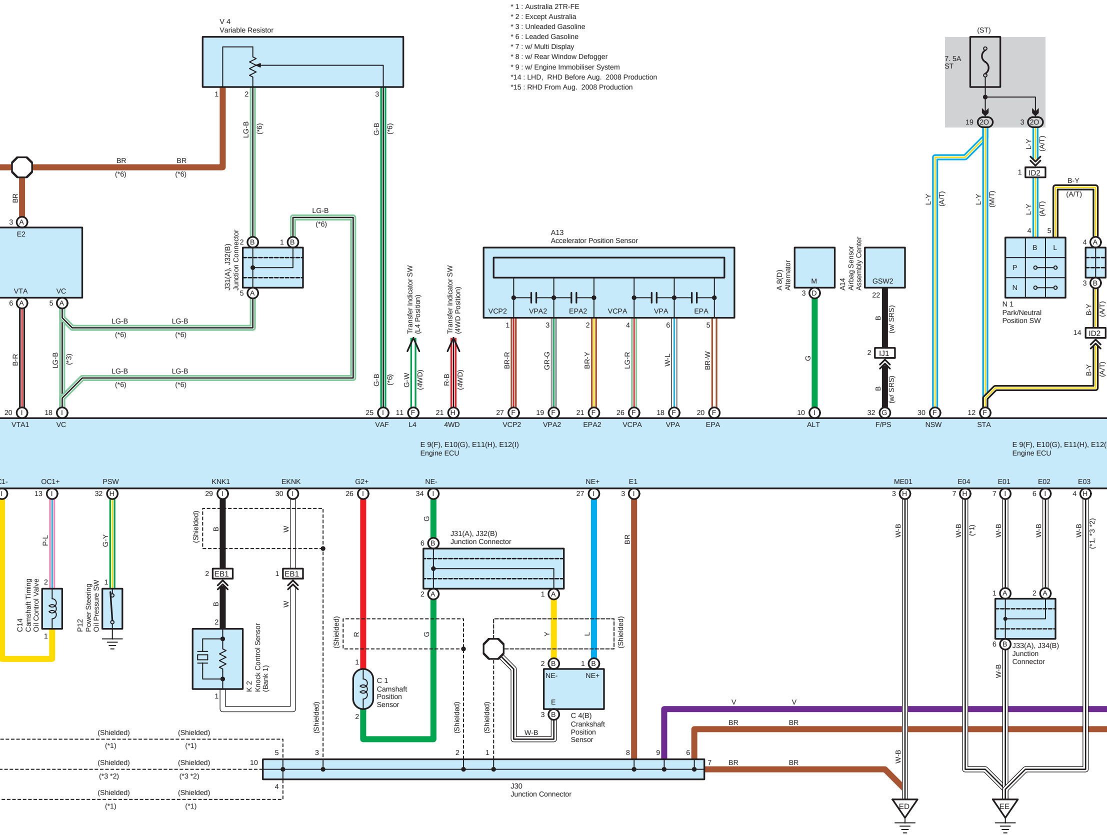

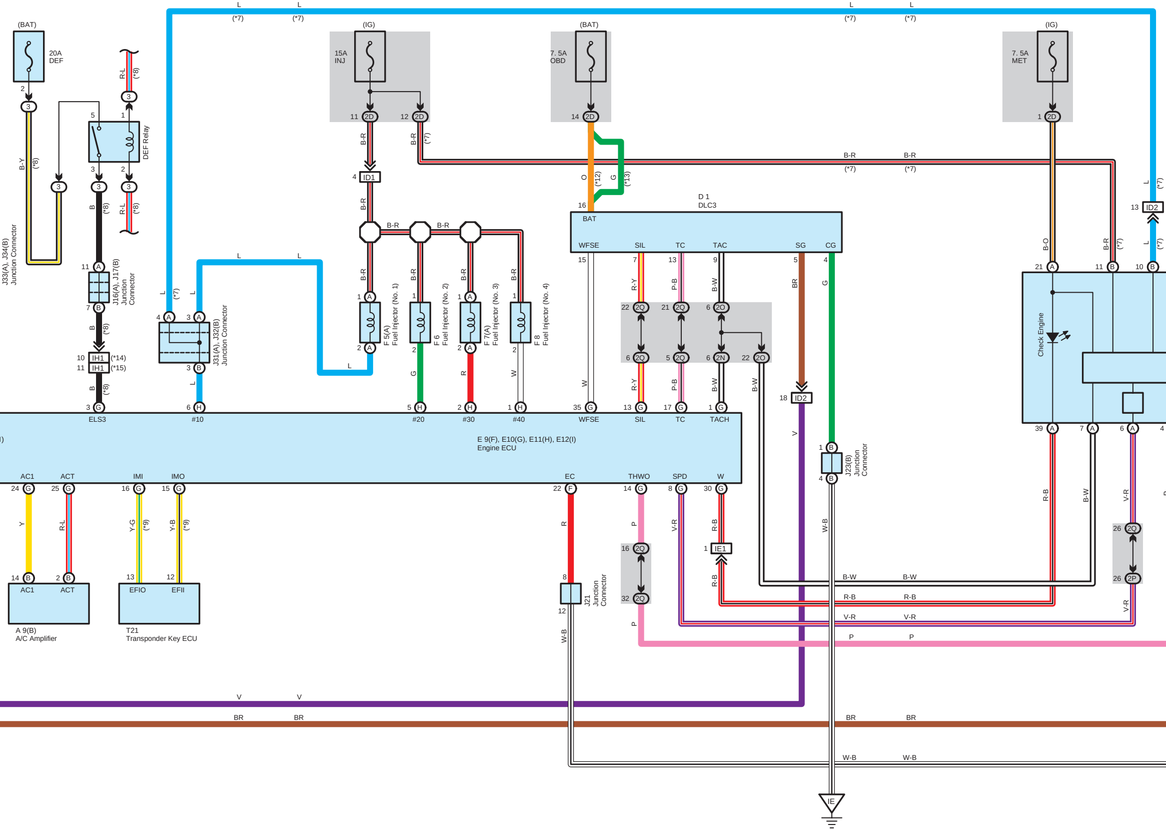
(BAT)
20A DEF
B-Y (*8)
R-L (*8)
DEF Relay
B (*8)
J33(A), J34(B) Junction Connector
J16(A), J17(B) Junction Connector
IH1 (*14)
IH1 (*15)
L (*7)
J31(A), J32(B) Junction Connector
(IG)
15A INJ
B-R
B-R (*7)
ID1
F 5(A) Fuel Injector (No. 1)
F 6 Fuel Injector (No. 2)
F 7(A) Fuel Injector (No. 3)
F 8 Fuel Injector (No. 4)
G
R
W
(BAT)
7. 5A OBD
O (*12)
G (*13)
D 1 DLC3
BAT
WFSE
SIL
TC
TAC
SG
CG
R-Y
P-B
B-W
BR
ID2
(IG)
7. 5A MET
B-O
Check Engine
E 9(F), E10(G), E11(H), E12(I) Engine ECU
ELS3
#10
#20
#30
#40
WFSE
SIL
TC
TACH
AC1
ACT
IMI
IMO
EC
THWO
SPD
W
Y
R-L
Y-G (*9)
Y-B (*9)
A 9(B) A/C Amplifier
T21 Transponder Key ECU
EFIO
EFII
J21 Junction Connector
J23(B) Junction Connector
IE1
R-B
V-R
P
V
W-B
IE

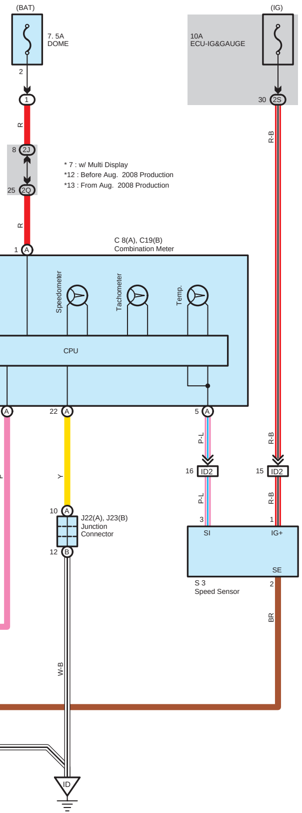
(BAT)
7. 5A
DOME
2
1
R
8
2J
25
2O
R
1
A
(IG)
10A
ECU-IG&GAUGE
30
2S
R-B
C 8(A), C19(B)
Combination Meter
Speedometer
Tachometer
Temp.
CPU
A
P
22
A
Y
10
A
J22(A), J23(B)
Junction
Connector
12
B
W-B
ID
5
A
P-L
16
ID2
P-L
3
SI
R-B
15
ID2
R-B
1
IG+
SE
2
S 3
Speed Sensor
BR

* 7 : w/ Multi Display
*12 : Before Aug. 2008 Production
*13 : From Aug. 2008 Production